NOTES:
1. MAXIMUM MOUNTING TORQUE = 4lbs-in.
2. HARDWARE IS INCLUDED.
3. THIS PART CODED "NCA". API TECHNOLOGIES DOES NOT HAVE CHANGE AUTHORITY. CUSTOMER APPROVAL REQUIRED BEFORE PRODUCT/PROCESS CHANGES CAN BE MADE. (46)

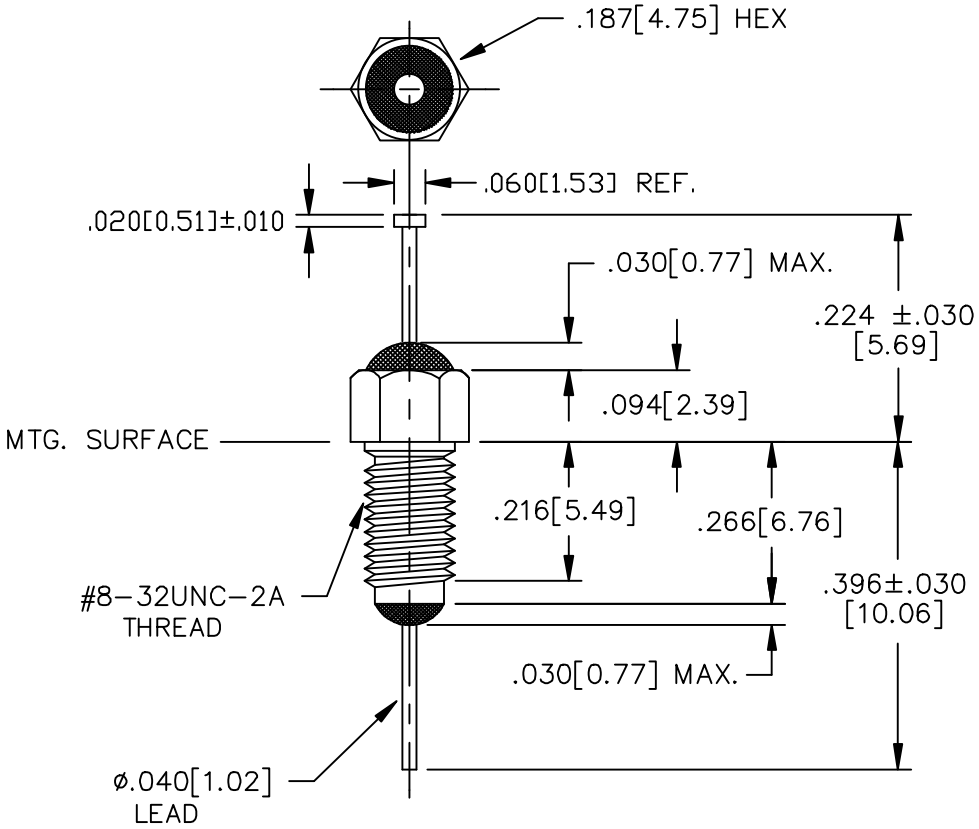

LEAD FINISH:	SOLDER
BUSHING FINISH:	SOLDER COATED
CAPACITANCE	3000pF +100/-0%
TEMP. RANGE	-55°C TO 125°C
CURRENT	15 AMP MAX.
WORKING VOLTAGE	85°C 85 VAC MAX. 125°C 125 VDC MAX.
D.C. RESISTANCE	.01ohms MAX.

MIN. I.L. PER MIL-STD-220 AT 25°C NO LOAD

FREQ. MHz	I.L. (db)
10	10
30	--
100	30
500	55
1-10 GHz	65

SCHEMATIC

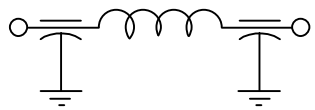

MARKING:
PART: M15733/44-0001
BAG:
MIL 15733/44-0001
OLSP2
125VDC
MAX. OPER. TEMP. : 125°C
15 AMPS
QTY/BAG (100 MAX.)
P.O. NO.
NOTE: PACKAGE TO BE MARKED SAME AS THE BAG.

REV. NO.	CHANGE NOTICE
46	CN 68508-ENG
45	CN 23396-CPD
44	CN 211855
43	CN 184950

TOLERANCES UNLESS OTHERWISE SPECIFIED
Fractions ± 1/64
Dec. .xx±
Dec. .xxx±.005
Angles ±0° 30'
CODE IDENT. NO. OLSP2

api technologies corp.
FAIRVIEW PENNSYLVANIA

Dwn. KAUFFMAN	Description Pi RESIN SEAL FILTER
Date 4-23-13	
Engr. M.McALEVY	51-744-003
Scale NONE	